Warranty Statement

ThunderForm Loaded Enclosures purchased in the United States from an authorized MTX dealer are guaranteed against defects in material and workmanship for a period of two years from the date purchased by the end user, and limited to the original retail purchaser of the product.

Amplified ThunderForm Enclosures purchased in the United States from an authorized MTX dealer are guaranteed against defects in material and workmanship for a period of one year from the date purchased by the end user, and limited to the original retail purchaser of the product.

Product found to be defective during that period will be repaired or replaced by MTX at no charge. This warranty is void if it is determined that unauthorized parties have attempted repairs or alterations of any nature. Warranty does not extend to cosmetics or finish. Before presuming a defect is present in the product, be certain that all related equipment and wiring is functioning properly. MTX disclaims any liability for other incurred damages resulting from product defects. Any expenses incurred in the removal and reinstallation of products are not covered by this warranty. MTX's total liability will not exceed the purchase price of the product. If a defect is present, your authorized MTX dealer may be able to effect repairs.

Proof of purchase is required when requesting service, so please retain your sales receipt and take a moment to register your product online at mtx.com.

MAXIMIZE YOUR SYSTEM'S PERFORMANCE
streetwires.com
STREETWIRES®

One Mitek Plaza, Winslow, IL. 61089
1-800-225-5689 mtx.com

21A7860

MTX AUDIO THUNDERFORM®

FORD F-150 REGULAR CAB

Vehicle Specific Subwoofer Enclosure

Made in the USA

READ ALL DIRECTIONS CAREFULLY BEFORE BEGINNING

MOUNTING LOCATION: The enclosure mounts behind the seat of a regular cab truck.

TOOLS REQUIRED FOR INSTALLATION:

Powered Screwdriver with #2 Phillips Head Bit

Ratchet	1/4” Socket
Wire Cutters	Terminal Crimpers
7/32” Socket	8mm Socket

INSTALLATION: Follow the steps below

1. Move seat and seat back all the way forward. You do not need to remove the seat.

2. If truck is equipped with a rear tool tray, this tray must be removed to mount enclosure. Remove rubber caps to expose (3) 7/32” bolts, remove nuts. Pull up on tool tray, it will release effortlessly. Save these parts to replace later if you sell or trade the vehicle.

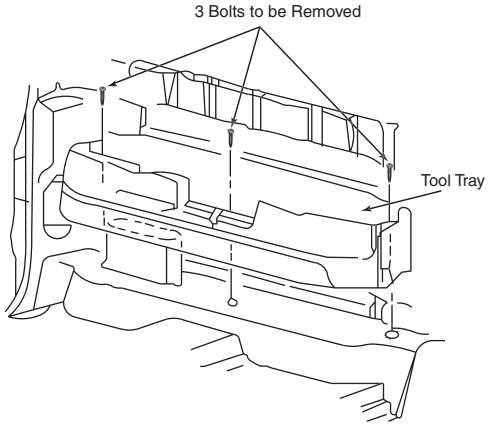

3. Place Thunderform in vehicle with the woofers firing forward into the back of seat (do not mount yet).

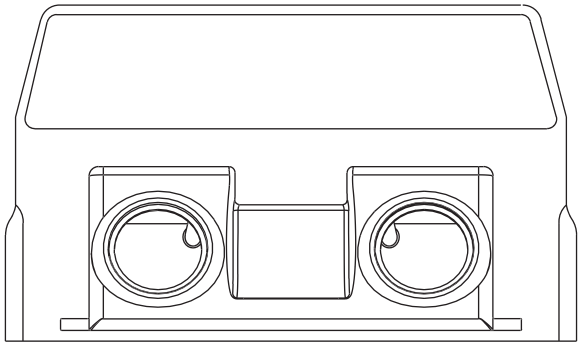

Conventional Wiring of Aftermarket Radio

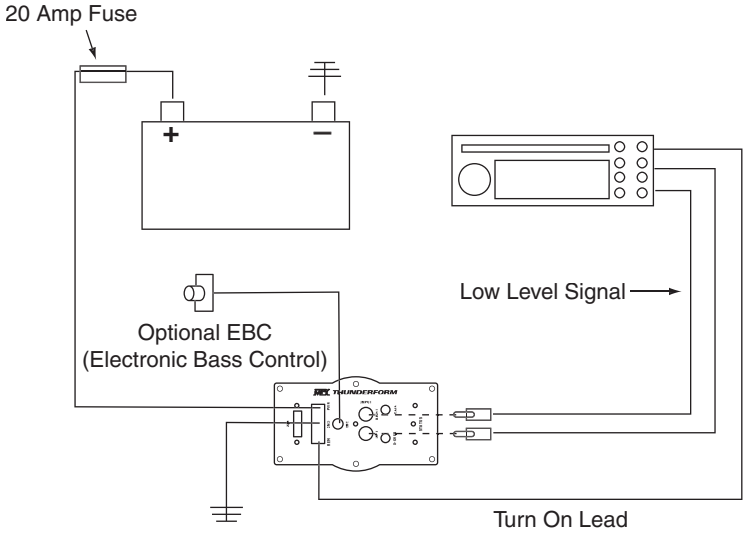

level before distortion. Turn the gain knob on the Thunderform pre-amp clockwise until the speaker starts to distort and reduce gain to loudest listening level before distortion.

Optional- The EBC, or Electronic Bass Control, allows a remote bass control to be adjusted from the driver's seat.

Setting Crossover

You should set the crossover to your own personal listening taste. The crossover is adjustable to any frequency between 50Hz (counter clockwise) to 150Hz (clockwise). As a guideline, the goal is to create the illusion of bass up front. The higher the crossover point the more “audibly visible” your sub is going to be. Take your time and really listen to your system, grab a soda and a few of your favorite tunes and have fun.

TROUBLESHOOTING TIPS IF AMP DOES NOT TURN ON

Check all connections at battery and that fuse is installed
Check speaker wire connections
Check ground
Check fuse on pre-amp

21. Reinstall kick panel on driver side. Replace threshold trim panels.

22. Using the screws provided, install the enclosure into vehicle as below

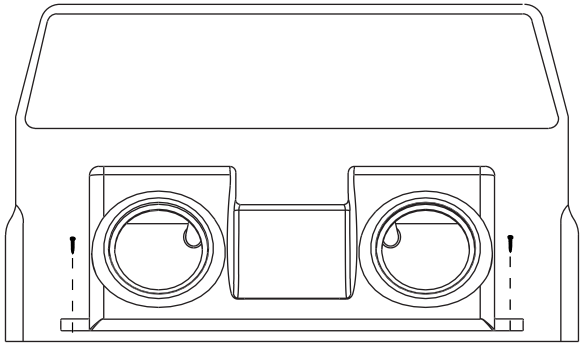

For technical assistance call 1-800-CALL MTX.

These instructions are guidelines only and in no way are intended to replace a professional installation. As always before screwing or drilling check to make sure you will not damage any wires or hoses or cause damage to the vehicle.

Warning: *Batteries normally produce explosive gases which can cause personal injury. Therefore, do not allow flames, sparks or lighted substances to come near the battery. When charging or working near a battery, always shield your face and protect your eyes. Always provide ventilation.*

4. If externally amplified make speaker connections to the enclosure from the amplifier: loosen terminal knobs (a 13-mm nut driver can be used). Connect speaker wires from amplifier to enclosure, positive to red terminal knob and negative to black terminal knob. Refer to Step 22 for mounting directions.

AMPLIFIED THUNDERFORM

Routing Power Wire; we recommend a connection directly to the battery.

5. Remove drivers side door threshold trim, pull up slowly but firmly from one side and work your way over, it will unsnap easily.

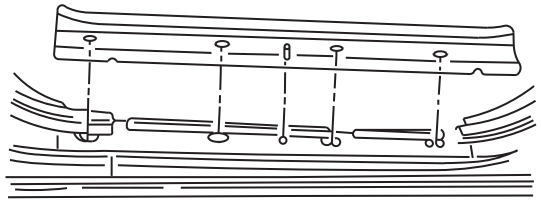

6. Using furnished wiring harness route 10ga red power wire starting at pre-amp location. Route power wire on drivers side under threshold removed in Step 5.

7. Remove driver’s side kick panel, by pulling outwards to unsnap. Route the 10ga red power wire under carpet and over to the grommet in the fire wall, just behind brake pedal.

8. Open hood; locate the factory grommet on the fire wall on the driver's side, just left and under the brake master cylinder. It will be a black grommet about two inches in diameter. This pulls out very easily. Cut a small "X" in the center of the grommet to accept the 10ga red power wire.

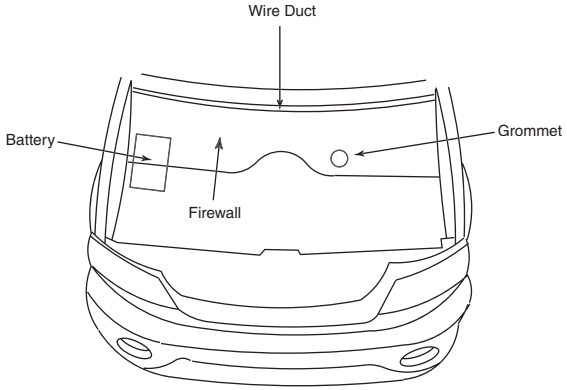

9. Route 10ga red power wire through grommet into the engine compartment.

10. Route 10ga red power wire through wire duct on fire wall. Remove Phillips head screws at bottom of wire duct, route wiring and replace wire duct.

11. Cut 10ga red power wire to length, connect the supplied fuse holder from the wire kit, to the end of the 10 ga red power wire. Connect other end of fuse holder to ring terminal provided.

12. Remove the 20amp fuse from MTX fuse holder. Connect ring terminal to positive side of battery. Remove the 8mm bolt from factory battery terminal, lift the small tab on battery terminal to allow rotation and removal of the 8mm bolt. Pass 8mm bolt through battery terminal, then ring terminal, and into the other side of battery terminal and retighten.

Note: When the battery is disconnected and reconnected, some abnormal drive symptoms may occur while the vehicle relearns its adaptive strategy. The vehicle may need to be driven 10 miles or more to relearn the strategy.

13. Ground amplifier to chassis of vehicle; connect the terminal provided to the 10ga black wire from furnished wiring harness. A good ground is as important as the power connection. The ground should be as short as possible and the contact point should be free of paint and debris.

SPEAKER WIRES

14. Remove threshold trim on passenger side; pull up slowly but firmly from one side and work your way over, it will unsnap easily.

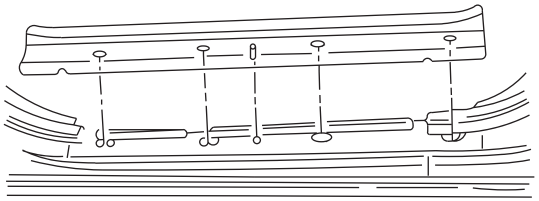

15. Tap into the rear speaker wires in the small wire bundle with the supplied RCA High Level input wires and route to pre-amp of enclosure. Wiring colors for the rear speakers are left side, tan/yellow (positive), gray/light blue (negative). Right side, orange/red (positive), brown/pink (negative).

Although, MTX has made every effort to assure proper wiring colors, MTX is not responsible for any changes made by the vehicle manufacturer which sometime occur. If wiring colors do not match then physical verification is required

CONNECTION TO ENCLOSURE

16. Connect speaker wire RCA's to the inputs of pre-amp.

Note: Patented BTL turn on circuitry- amplifier senses DC offset provided by "high

powered" or BTL type head units. This feature turns the amplifier on automatically if you are using high level inputs.

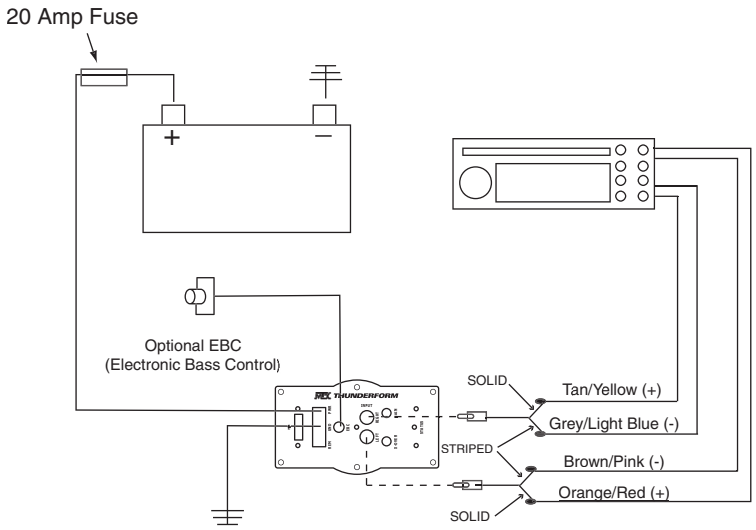

17. Plug power wire harness into amplifier pre- amp.

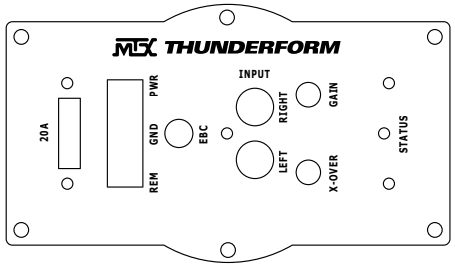

18. Replace 20amp fuse under hood.

19. When amp turns on, LED will display red during diagnostic mode, and then green, signaling amp is on and functioning. Amp will only turn on when radio is on.

20. Adjust gain and crossover

Setting Gain

Turn gain knob on Thunderform pre-amp to minimum, counter clockwise. Play a favorite tape or compact disc that contains consistent music and bass. Turn the source unit to maximum listening level. You should know that some source units will produce distortion or "clip" before the unit reaches maximum volume. Reduce volume to the loudest listening