Warranty Statement

ThunderForm Loaded Enclosures purchased in the United States from an authorized MTX dealer are guaranteed against defects in material and workmanship for a period of two years from the date purchased by the end user, and limited to the original retail purchaser of the product.

Amplified ThunderForm Enclosures purchased in the United States from an authorized MTX dealer are guaranteed against defects in material and workmanship for a period of one year from the date purchased by the end user, and limited to the original retail purchaser of the product.

Product found to be defective during that period will be repaired or replaced by MTX at no charge. This warranty is void if it is determined that unauthorized parties have attempted repairs or alterations of any nature. Warranty does not extend to cosmetics or finish. Before presuming a defect is present in the product, be certain that all related equipment and wiring is functioning properly. MTX disclaims any liability for other incurred damages resulting from product defects. Any expenses incurred in the removal and reinstallation of products are not covered by this warranty. MTX's total liability will not exceed the purchase price of the product. If a defect is present, your authorized MTX dealer may be able to effect repairs.

Proof of purchase is required when requesting service, so please retain your sales receipt and take a moment to register your product online at mtx.com.

MAXIMIZE YOUR SYSTEM'S PERFORMANCE
streetwires.com
STREETWIRES®

One Mitek Plaza, Winslow, IL. 61089
1-800-225-5689 mtx.com

21A7862

MTX AUDIO THUNDERFORM®

FORD F-150 SUPERCREW

Vehicle Specific Subwoofer Enclosure

Made in the USA

READ ALL DIRECTIONS CAREFULLY BEFORE BEGINNING

MOUNTING LOCATION: The enclosure mounts on the driver's side under rear seat on Ford F-150 SuperCrew.

TOOLS REQUIRED FOR INSTALLATION:

Wire Cutters	5/16" Wrench
Terminal Crimpers	1/2" Socket

INSTALLATION: Follow the steps below

1. Remove the 2 plastic bolt covers. Press down and slide forward. Remove the 3 seat bracket bolts, flip bottom of seat up and place enclosure under seat.

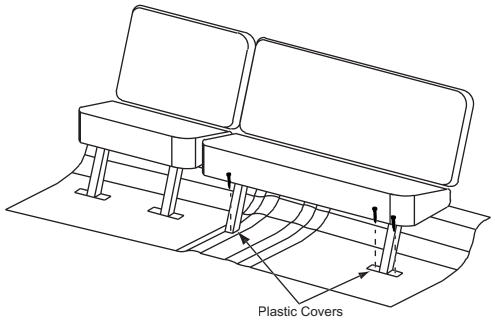

2. If externally amplified make speaker connections to the enclosure from the amplifier; loosen terminal knobs (a 13-mm nut driver can be used). Connect speaker wires from amplifier to enclosure, positive to red terminal knob and negative to black terminal knob. Refer to Step 19 for mounting directions.

AMPLIFIED THUNDERFORM

Routing Power Wire; we recommend a connection directly to the battery.

3. Remove both passenger's side threshold trim; pull up on trim, it will remove easily.

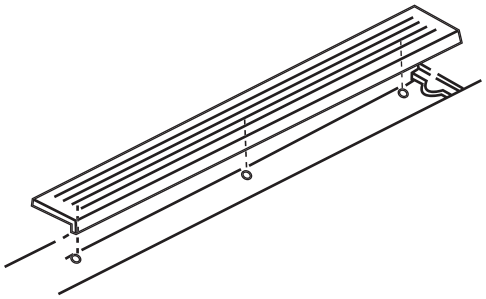

Conventional Wiring of Aftermarket Radio

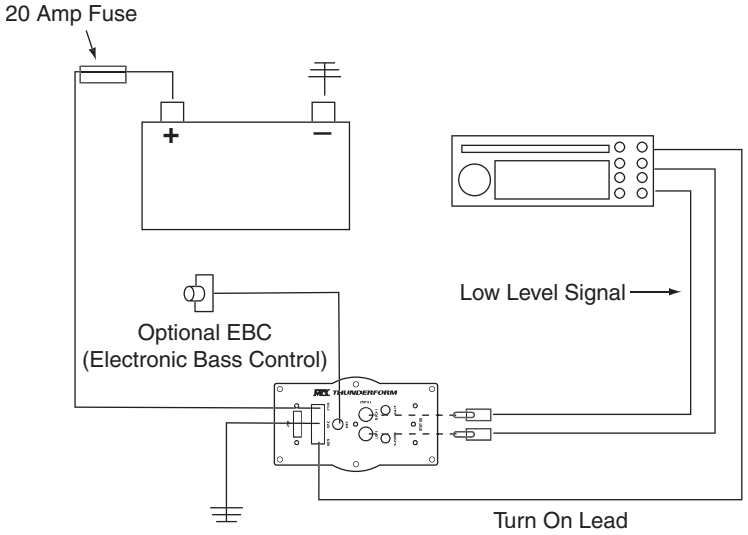

18. Reinstall threshold trim. Locate and align holes in vehicle with pins on trim.

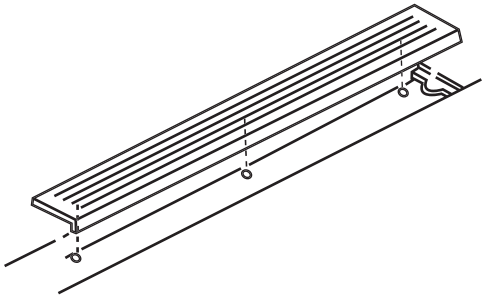

19. Bolt seat bracket legs back down and put plastic bolt covers back on.

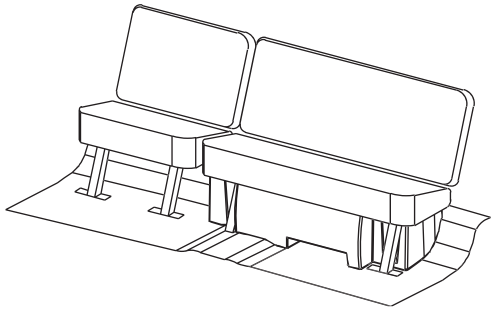

For technical assistance call 1-800-CALL MTX.

These instructions are guidelines only and in no way are intended to replace a professional installation. As always before screwing or drilling check to make sure you will not damage any wires or hoses or cause damage to the vehicle.

Warning: *Batteries normally produce explosive gases which can cause personal injury. Therefore, do not allow flames, sparks or lighted substances to come near the battery. When charging or working near a battery, always shield your face and protect your eyes. Always provide ventilation*

4. Route 10ga red power wire from furnished wiring harness starting at pre-amp location. Route wire under carpet on passenger's side, over to threshold along with factory wiring to the front of vehicle.

5. Open hood.

6. Drill a hole through the firewall. Locate a spot low on the firewall on the passenger's side. You should always look to find a clear path. Drill a hole from inside of the vehicle into engine compartment and insert grommet.

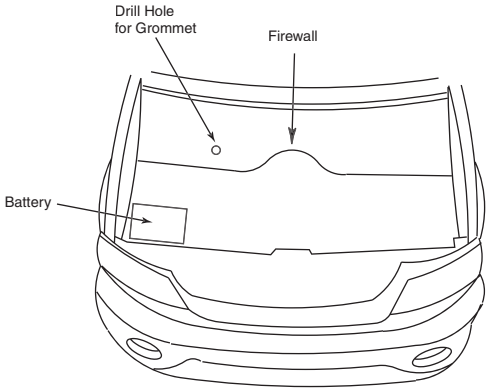

Note: To avoid any damage to parts inside engine compartment, drill from inside of vehicle using a short bit.

7. Route 10ga red power wire through a grommet into the engine compartment.

8. Route 10ga red power wire through engine compartment safely away from any moving or hot parts that could damage the wire.

9. Cut 10ga red power wire to length, connect the supplied fuse holder from the wire kit to the end of the wire.

10. Remove 20amp fuse from MTX fuse holder. Connect furnished ring terminal to positive side of battery. Remove 5/16" bolt from factory battery terminal. Pass bolt through factory battery terminal, then ring terminal, and into the other side of factory battery terminal and retighten bolt.

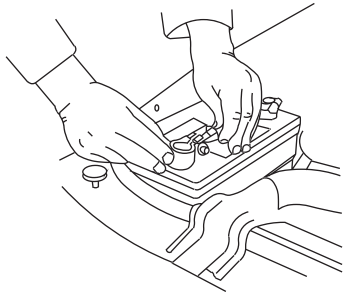

11. Ground amplifier to chassis of vehicle; connect the terminal provided to the 10ga black wire from furnished wiring harness. A good ground is as important as the power connection. The ground should be as short as possible and the contact point should be free of paint and debris.

SPEAKER WIRES

12. In the channel on driver's and passenger's side threshold locate the rear speaker wires. Colors are driver's side, yellow/blue (positive), tan/yellow (negative), and passenger's side, orange/yellow (positive), brown/purple (negative). Tap into wires with supplied RCA High Level input wires and route under carpet to the rear seat, over to pre-amp on enclosure.

Although, MTX has made every effort to assure proper wiring colors, MTX is not responsible for any changes made by the vehicle manufacturer which sometime occur. If wiring colors do not match then physical verification is required.

CONNECTION TO ENCLOSURE

13. Connect speaker wire RCA's to the inputs of pre-amp.

Note: Patented BTL turn on circuitry- amplifier senses DC offset provided by "high powered" or BTL type head units. This feature turns the amplifier on automatically if you are using high level inputs.

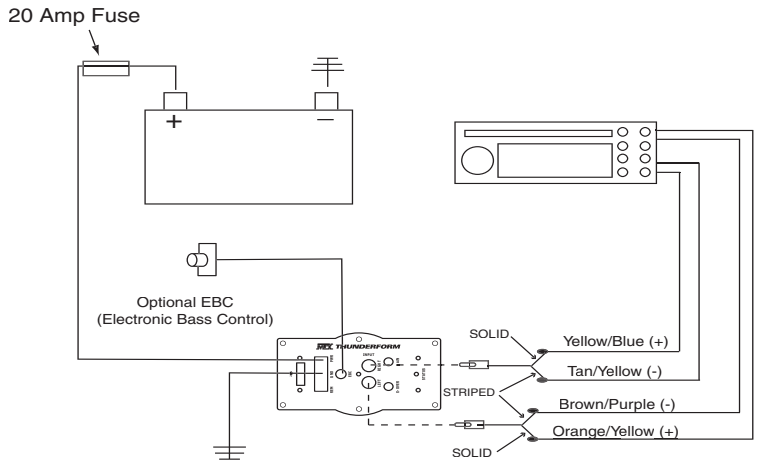

14. Plug power harness into amplifier pre-amp.

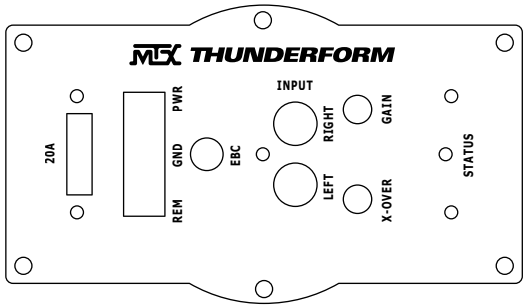

15. Replace 20amp fuse under hood.

16. When amp turns on, LED will display red during diagnostic mode, and then green, signaling amp is on and functioning. Amp will only turn on when radio is on.

17. Adjust gain and crossover.

Setting Gain

Turn gain knob on Thunderform pre-amp to minimum, counter clockwise. Play a favorite tape or compact disc that contains consistent music and bass. Turn the source unit to maximum listening level. You should know that some source units will produce distortion or "clip" before the unit reaches maximum volume. Reduce volume to the loudest listening level before distortion. Turn the gain knob on the Thunderform pre-amp clockwise until the speaker starts to distort and reduce gain to loudest listening level before distortion.

Optional- The EBC, or Electronic Bass Control, allows a remote bass control to be adjusted from the driver's seat.

Setting Crossover

You should set the crossover to your own personal listening taste. The crossover is adjustable to any frequency between 50Hz (counterclockwise) to 150Hz (clockwise). As a guideline, the goal is to create the illusion of bass up front. The higher the crossover point the more "audibly visible" your sub is going to be. Take your time and really listen to your system, grab a soda and a few of your favorite tunes and have fun.

TROUBLESHOOTING TIPS IF AMP DOES NOT TURN ON

Check all connections at battery and that fuse is installed

Check speaker wire connections

Check ground

Check fuse on pre-amp