Warranty Statement

ThunderForm Loaded Enclosures purchased in the United States from an authorized MTX dealer are guaranteed against defects in material and workmanship for a period of two years from the date purchased by the end user, and limited to the original retail purchaser of the product.

Amplified ThunderForm Enclosures purchased in the United States from an authorized MTX dealer are guaranteed against defects in material and workmanship for a period of one year from the date purchased by the end user, and limited to the original retail purchaser of the product.

Product found to be defective during that period will be repaired or replaced by MTX at no charge. This warranty is void if it is determined that unauthorized parties have attempted repairs or alterations of any nature. Warranty does not extend to cosmetics or finish. Before presuming a defect is present in the product, be certain that all related equipment and wiring is functioning properly. MTX disclaims any liability for other incurred damages resulting from product defects. Any expenses incurred in the removal and reinstallation of products are not covered by this warranty. MTX's total liability will not exceed the purchase price of the product. If a defect is present, your authorized MTX dealer may be able to effect repairs.

Proof of purchase is required when requesting service, so please retain your sales receipt and take a moment to register your product online at mtx.com.

MAXIMIZE YOUR SYSTEM'S PERFORMANCE
streetwires.com
STREETWIRES®

One Mitek Plaza, Winslow, IL. 61089
1-800-225-5689 mtx.com

21A7858

MTX AUDIO THUNDERFORM®

FORD EXPEDITION

And Lincoln Navigator

Vehicle Specific Subwoofer Enclosure

Made in the USA

READ ALL DIRECTIONS CAREFULLY BEFORE BEGINNING

MOUNTING LOCATION: The enclosure mounts behind rear panel on passenger's side and replaces factory cargo net.

TOOLS REQUIRED FOR INSTALLATION:

Phillips Head Screwdriver	T50 Torx
15mm Wrench	10mm Socket
1/4" Socket	Ratchet
6" Ratchet Extension	11/32" Socket
Wire Crimper	Wire Cutters

INSTALLATION: Follow the steps below

1. Start by removing the header trim, if you are standing at the rear of vehicle hatch facing in with hatch open over your head this is the panel at the hinged section of hatch. This panel is held in place with four snaps. Pull from one side and work over to the other.

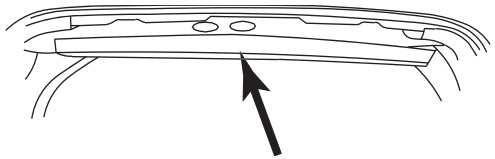

2. Remove seal plate at bottom of hatch opening. Trim piece is held down by eleven snaps. As like the previous piece start from one end and pull up slowly working your way over to the other side.

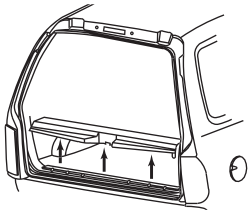

3. Remove two screws on passenger side of vehicle. These are just left of the jack storage at the very rear of the opening. They look like knobs, just twist by hand, no tools are needed.

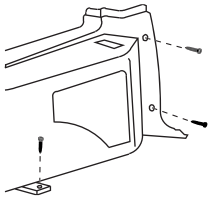

4. If equipped with third row seating remove seat and then seat belt on passenger side. Unsnap seat belt cover, pull from bottom of cover remove T-50 torx head bolt.

5. Remove pillar cover on passenger side rear, directly above the screws you removed in Step 3. Panel is held into place with three clips, pull in direction away from the window towards center of vehicle, top first then bottom.

6. Raise second row seating, remove carpet trim panel behind seats. Panel is held into place with six clips, pull up on one end and work your way over to the other.

adjustable to any frequency between 50Hz (counterclockwise) to 150Hz (clockwise). As a guideline, the goal is to create the illusion of bass up front. The higher the crossover point the more "audibly visible" your sub is going to be. Take your time and really listen to your system, grab a soda and a few of your favorite tunes and have fun.

TROUBLESHOOTING TIPS IF AMP DOES NOT TURN ON

Check all connections at battery and that fuse is installed

Check speaker wire connections

Check ground

Check fuse on pre-amp

35. Replace the factory side panel. This is fairly easy, just reverse the process of removal. The rubber trim around the door goes over the top of the panel. It is easier to start at the top and work your way down. Reverse Steps 1 thru 9 to reassemble the interior of the vehicle.

For technical assistance call 1-800-CALL MTX.

These instructions are guidelines only and in no way are intended to replace a professional installation. As always before screwing or drilling check to make sure you will not damage any wires or hoses or cause damage to the vehicle.

Warning: *Batteries normally produce explosive gases which can cause personal injury. Therefore, do not allow flames, sparks or lighted substances to come near the battery. When charging or working near a battery, always shield your face and protect your eyes. Always provide ventilation.*

Conventional Wiring of Aftermarket Radio

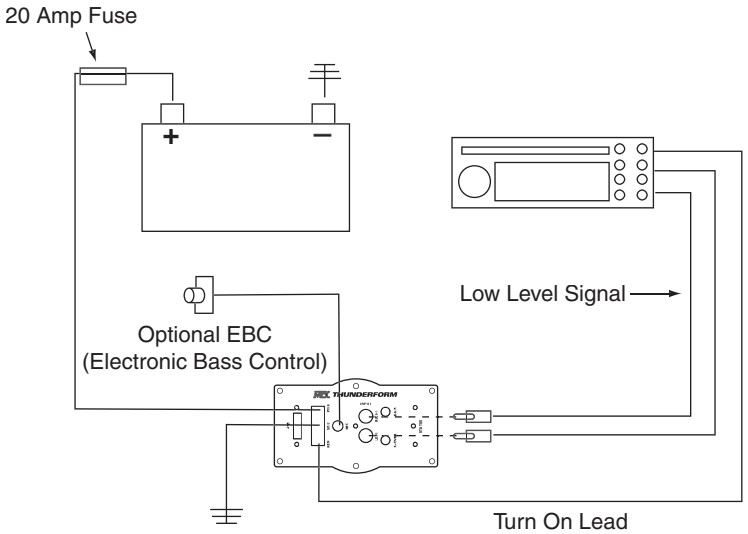

CONNECTION TO ENCLOSURE

30. Connect speaker wire RCA's to the inputs of pre-amp.

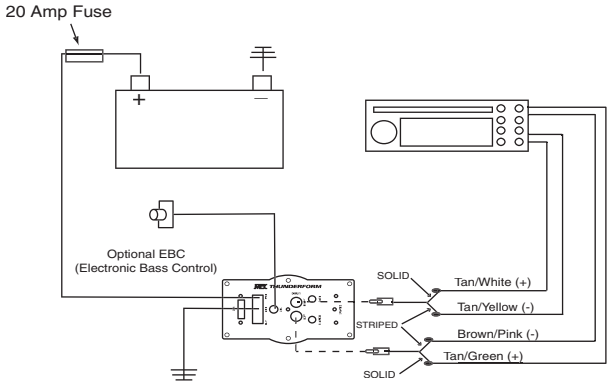

Note: Patented BTL turn on circuitry- amplifier senses DC offset provided by "high powered" or BTL type head units. This feature turns the amplifier on automatically if you are using high level inputs.

31. Plug power harness into amplifier pre-amp.

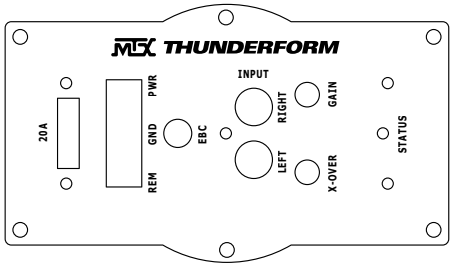

32. Replace 20amp fuse under hood.

33. When amp turns on LED will display red during diagnostic mode and then to green, signaling amp is on and functioning (amp will only turn on when radio is on).

34. Adjust gain and crossover.

Setting Gain

Turn gain knob on Thunderform pre-amp to minimum, counter clockwise. Play a favorite tape or compact disc that contains consistent music and bass. Turn the source unit to maximum listening level. You should know that some source units will produce distortion or "clip" before the unit reaches maximum volume. Reduce volume to the loudest listening level before distortion. Turn the gain knob on the Thunderform pre-amp clockwise until the speaker starts to distort the reduce gain to the loudest listening level before distortion.

Optional- The EBC, or Electronic Bass Control, allows a remote bass control to be adjusted from the driver's seat.

Setting Crossover

You should set the crossover to your own personal listening taste. The crossover is

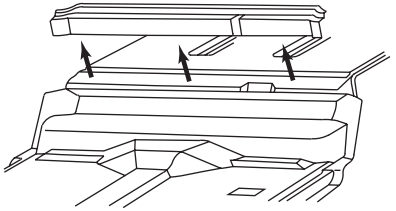

7. Remove second row seating seat belt. Top of belt can be removed by lifting cover from the bottom to unsnap. Remove 15mm bolt. Bottom of seat belt is held into place with T-50 torx head, lift rubber boot to remove.

8. Remove pillar cover at passenger side rear door, panel is held into place with four clips. Start by pulling on top left, then top right. Pull slowly to center of vehicle. Bottom right clip is clipped into plastic panel; be careful not to break.

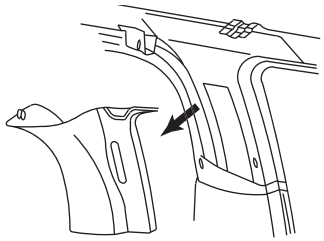

9. Remove passenger side rear door sill trim. Held into place by three clips. Pull slowly from the front; it will unsnap easy.

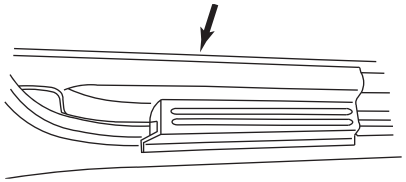

10. Pull the weather strip rubber gasket up at the passenger side rear door, pull up all the way to the roof of the vehicle. If you are standing at the rear passenger side door, look into the vehicle on the left hand side on the bottom of the rear panel is a metal clip. This was hidden underneath the rubber gasket you removed earlier. Pull the metal clip up. It is holding the front of the panel into place. Next pull from the top of the panel. This will be a little difficult so take your time. After the panel releases from the top, pull up on the carpet in front of the panel. You will find a tab on the bottom of the panel, towards the front under the carpet. Remove the phillips head screw. Pull up and out on the panel to free it. The panel will still be attached by the seat belts at the front and the rear; but you will be able to get enough slack to pull it to the opposite side of the vehicle. This will give you enough room to work.

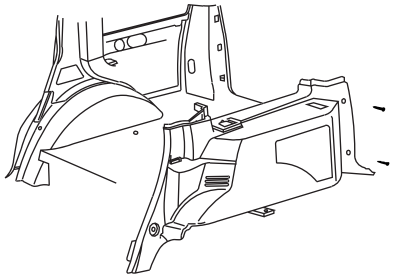

11. If vehicle was equipped with factory amplified subwoofer system remove three 11/32” bolts holding it into place.

12. To install grill into factory panel the cargo tray must be removed. Unsnap the nine white clips around the perimeter of the trim ring back. The trim ring along with the entire cargo tray assembly will come out the front. Retain the clips and tray you may want to replace it if you sell the vehicle.

13. Install grill furnished by MTX into the front of the panel into the location previously occupied by the trim ring. Using the 1/2” screws provided, screw grill from back through the factory slots in the panel.

14. Place enclosure into empty location behind the area that was occupied by the cargo tray. Using screws and washers provided mount the enclosure to vehicle through three holes in enclosure.

15. If externally amplified make speaker connections to the enclosure from the amplifier, loosen terminal knobs (a 13 mm nut driver can be used). Connect speaker wires from amplifier to enclosure, positive to red terminal knob and negative to black terminal knob. Refer to Step 34 to finish installation.

AMPLIFIED THUNDERFORM

Routing Power Wire; we recommend a connection directly to the battery.

16. Route 10ga red power wire from furnished wiring kit starting at pre-amp location after enclosure is mounted

17. Route power wire on passenger side under door threshold trim at rear door and around pillar trim between front and rear doors.

18. Remove passenger side front door threshold trim, as shown in Step 9. Route wire with factory wiring.

19. Remove passenger side kick panel, route wire around carpet and over to the console. Wire routes between fire wall and air ducts in front of console.

20. Route wire up from center of vehicle away from any interference to accelerator pedal.

21. Open hood; locate the factory grommet on the fire wall on the driver's side just left of the brake master cylinder. It will be a black grommet about two inches in diameter. This pulls out very easily. Cut a small "X" in the center of the grommet to accept 10ga power wire. Reinstall grommet.

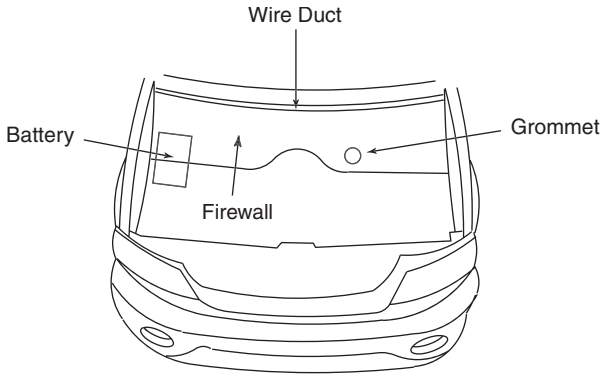

22. If grommet isn’t present drill a hole through the firewall. Locate a spot low on the firewall near the speedometer cable grommet. You should always look to find a clear path. Drill a hole from inside of the vehicle into engine compartment and insert grommet.

23. Route 10ga red power wire through grommet into the engine compartment.

24. Route wire through wire duct on fire wall. Remove phillips head screws at bottom of wire duct route wiring and replace wire duct.

25. Connect fuse holder furnished with wire kit to end of 10ga power wire. Connect other end of fuse holder to ring terminal provided. On some models it may be necessary to add additional length to power wire.

26. Remove 20amp fuse from MTX fuse holder and connect ring terminal to positive side of battery. Lift the small tab on the factory battery terminal to allow rotation and removal of 8mm bolt. Pass 8mm bolt through factory battery terminal then ring terminal and into other side of factory battery terminal and retighten.

Note: When the battery is disconnected and reconnected, some abnormal drive symptoms may occur while the vehicle relearns its adaptive strategy. The vehicle may need to be driven 10 miles or more to relearn the strategy.

27. Ground amplifier to chassis of vehicle; connect the terminal provided to the 10ga black wire from furnished wiring harness. A good ground is as important as the power connection. The ground should be as short as possible and the contact point should be free of paint and debris.

SPEAKER WIRES

28. Remove threshold trim on drivers' side; locate drivers side rear door speaker wires in the small wire bundle. 1997 - 1998 wiring colors are light blue/black (positive) and yellow (negative). 1999-up wiring colors are tan/white (positive) and tan/yellow (negative). Tap into wires with supplied RCA High Level input wire and route wiring around trim between front and rear doors. Remove threshold trim at drivers side rear door. Route wiring in channel to rear of door and around rear of seat through wire duct and to pre-amp on enclosure.

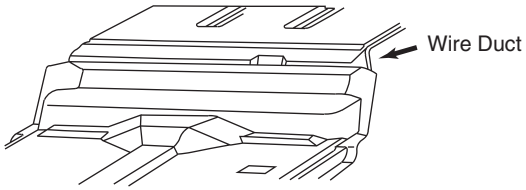

29. At threshold on passenger side in small wire bundle, locate rear passenger side door speaker wires. 1997 -1998 wiring colors are purple/white (positive) and light blue (negative). 1999-up wiring colors are tan/green (positive) and brown/pink (negative). Tap into wires with the supplied RCA High Level input wire and route on passenger side following the route made by power wire.

Although MTX has made every effort to ensure proper wiring colors we can not be responsible for any changes made by the manufacturer which sometime occur. If wiring colors do not match then physical verification is required.