1 CONNECT POWER

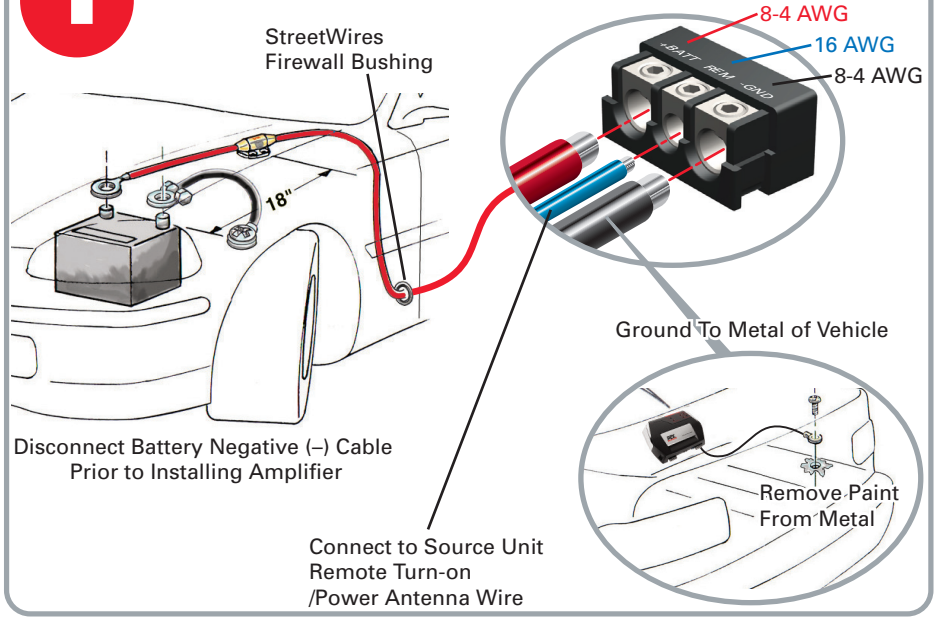

2 CONNECT SIGNAL

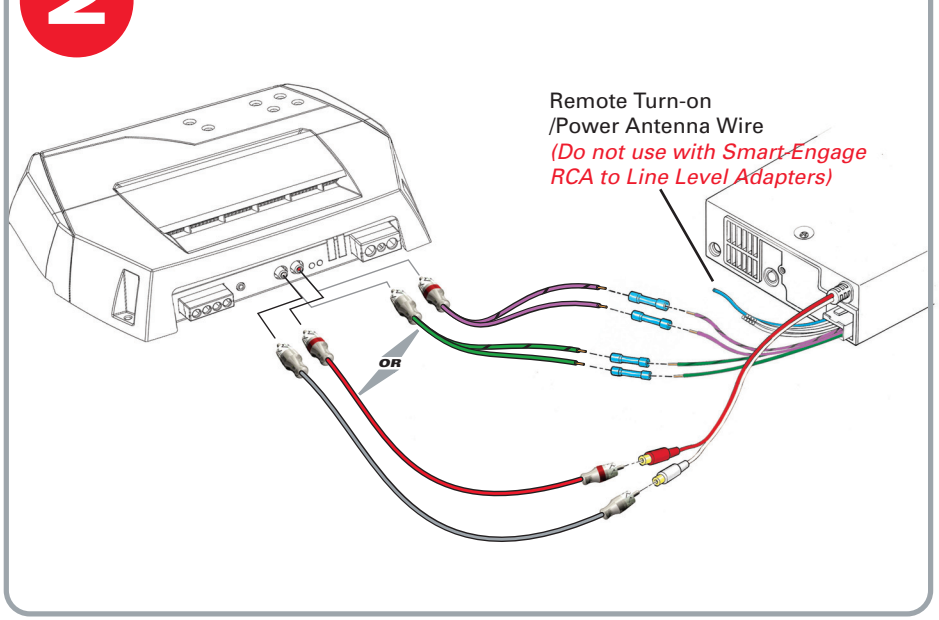

3 CONNECT SPEAKERS

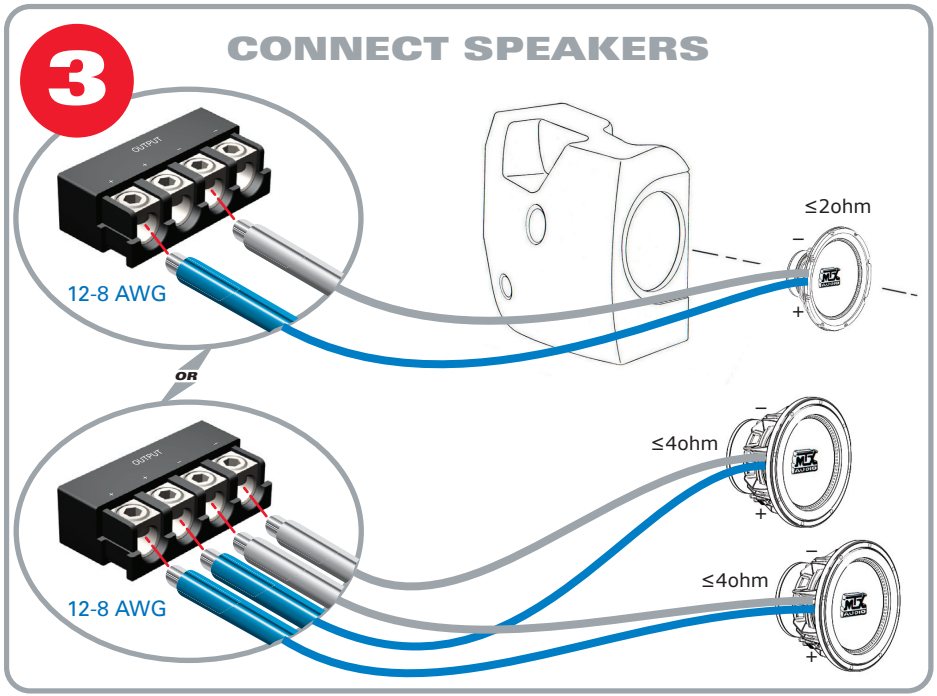
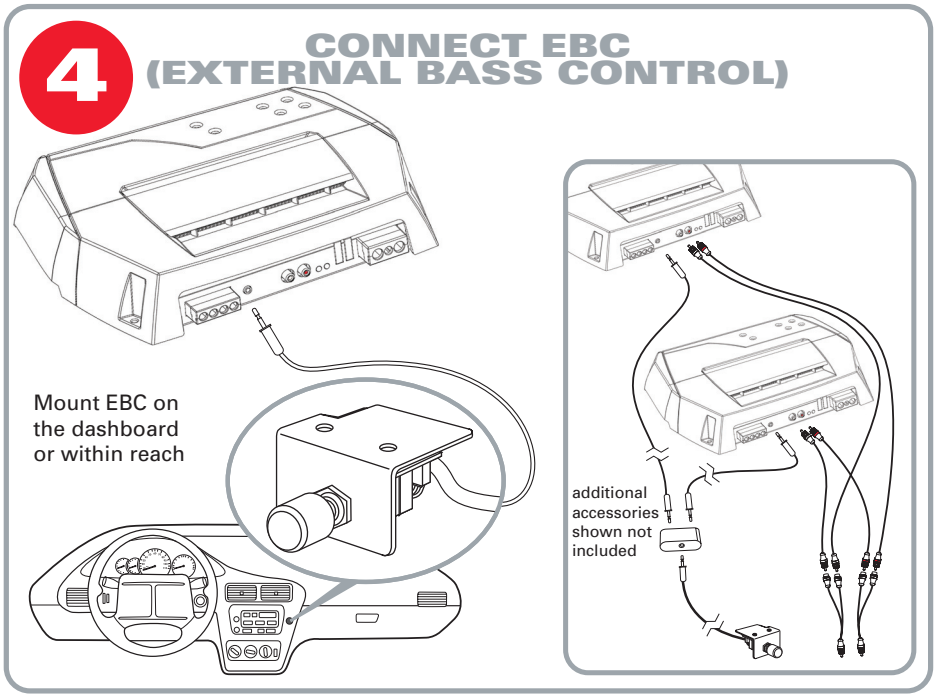
4 CONNECT EBC (EXTERNAL BASS CONTROL)